Instructions for use

HOME DELUXE
WIR MACHEN ZUHAUSE

Armchair PAKU

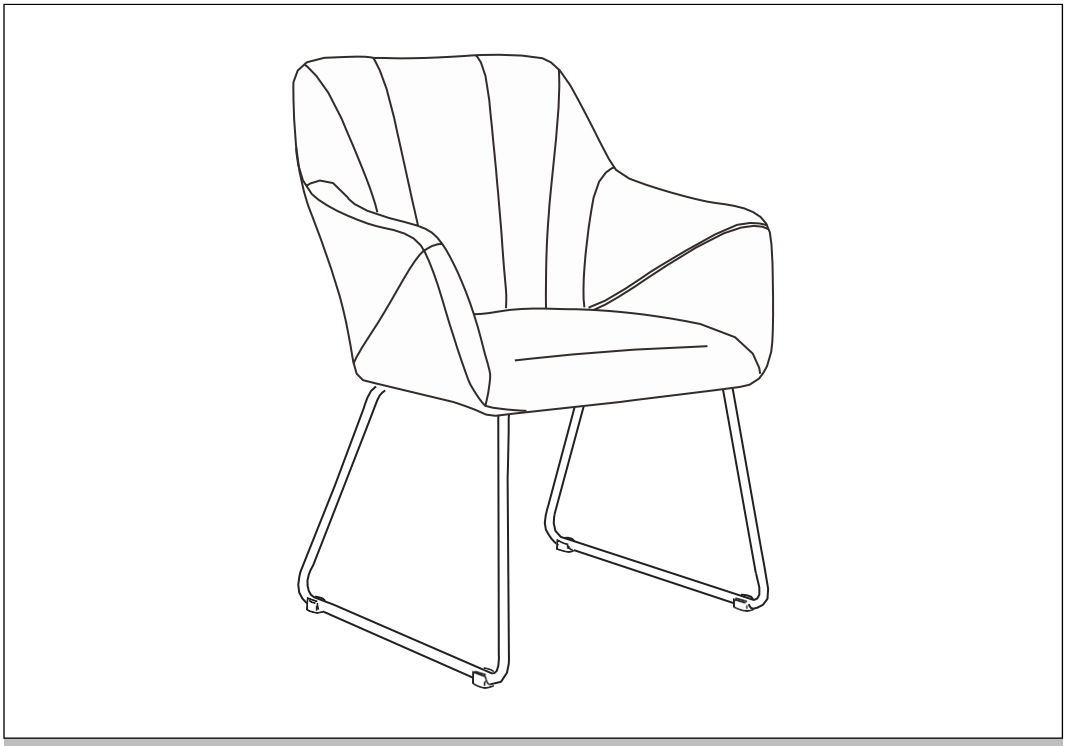

Original instructions for use

ATTENTION:

Read the instructions completely and carefully before installation and commissioning. It contains important information on assembly and use.

IMPORTANT:

KEEP FOR FUTURE REFERENCE. READ CAREFULLY!

Table of contents

1. General 3
1.1. Product overview 3
1.2. General information 3
1.3. Warranty 3
2. Information on the instructions for use 3
2.1. Availability of the instructions for use 3
2.2. Translation information 3
2.3. Target groups of the instructions for use 4
2.4. Explanation of symbols 4
2.5. General information on the instructions for use 4
2.6. Intended use 4
2.7. General safety instructions 5
3. Product features 6
3.1. Technical data 6
4. Scope of delivery 6
5. Assembly 7
5.1. Safety instructions 7
6. Application 8
6.1. Safety instructions 8
6.2. Initial commissioning 8
6.3. Operation 8
6.4. Storage location 8
7. Troubleshooting 8
8. Maintenance and care 8
9. Disposal 9

Dear customer,

Thank you for choosing a product from **Home Deluxe GmbH.** We hope you enjoy your new PAKU armchair.

The instructions for use support you in the commissioning, operation and maintenance of the product. The instructions for use and the safety instructions must be read carefully and completely. Follow these instructions to avoid dangers.

1. General

1.1. Product overview

Model:
Armchair PAKU Anthracite |Article ID: 20719 |Variants ID: 49717

1.2. General information

In order to live up to our claim, we are constantly improving the quality, simplifying the operation or adapting the products to the customer's wishes. Due to these changes, the current version of the instructions for use can be found on our homepage.

The term "product" is used in the instructions for use for the "PAKU armchair".

1.3. Warranty

The statutory liability for defects and warranty rights apply from the date of purchase.
Home Deluxe GmbH accepts no liability for damage caused by failure to observe the instructions for use. Complaints resulting from improper use are excluded from the warranty. In the event of defects to the product, please contact our customer service in writing, stating the product name, serial number and a photo of the type plate:

Home Deluxe GmbH
Schanzeweg 2
32312 Lübbecke
Germany
Tel.: +49 (0)5743 6181-0
E-mail: info@homedeluxe.de
www.home-deluxe-gmbh.de

If you have any further questions, please contact our customer service.

2. Information on the instructions for use

2.1. Availability of the instructions for use

The instructions for use are part of the product and should be kept complete and in the immediate vicinity of the product.

2.2. Translation information

The original instructions for use were written in German. Any other language available is a translation of the German version.

2.3. Target groups of the instructions for use

The instructions for use must be read and observed by every person involved with any of the following activities or use:

- Unpack
- Assembly / Installation
- Commissioning / Operation
- Maintenance / Testing / Care
- Troubleshooting / Repair
- Disposal

2.4. Explanation of symbols

Symbol	Explanation of symbols
	**WARNING** The symbol indicates possible hazards that can cause fatal and serious injuries. Before carrying out the corresponding assembly or application step, the corresponding note must be read.
	**INFO** The symbol gives important information and indicates damage to property. Observe these before carrying out the corresponding assembly or application step in order to understand problems and avoid damage.
	**Read instruction manual** The symbol indicates that the instructions for use must be read carefully before assembly/installation and/or operation of the appliance.

2.5. General information on the instructions for use

The instruction manual refers to the PAKU armchair. It contains important information on assembly, installation, operation, maintenance and cleaning. The instructions for use, in particular the safety instructions, must be read carefully before using the product. Only use the product as described in these instructions for use to prevent accidental injury or damage. If you pass the product on to third parties, these instructions for use must also be handed over.

2.6. Intended use

The product is of high quality, durable and intended or suitable exclusively for private use to a reasonable and customary extent. Furthermore, our product is **not intended for** commercial use. Commercial use is only permitted with the written consent of Home Deluxe GmbH.

The product is intended as seating furniture for the living room, dining room.

Only use the product as described in these instructions for use. Any other use is considered improper and may result in damage to property or personal injury. The manufacturer accepts no liability for damage caused by improper or incorrect use.

2.7. General safety instructions

General hazard warnings



- Make sure that all parts are undamaged. Damaged parts may cause injury and affect safety and function.
- Only place the product on a safe, level and solid surface.
- Do not make any changes to the product
- Check the fastening at regular intervals.

Danger for children



- Keep children away from packaging materials. There is a risk of suffocation, among other things!
- The scope of delivery contains small parts that can be swallowed or cause serious injuries.
- **Danger of tipping over!** The product is not a children's toy, climbing wall or sports equipment. The product can fall over if loaded on one side, the consequence of which can be death.
- Children can injure themselves when playing with the product or pulling it up.
- Do not place the product directly or in the immediate vicinity of a play area.
- Explain to the children how to use the product properly and never leave them unsupervised while playing.
- Make sure that small children do not put small parts in their mouths.

Risk of injury

Improper handling of the product can lead to injuries



- Check the product for visible damage before each use.
- Do not make any constructive changes to the product. Any modification must be authorised in writing by the manufacturer and carried out in accordance with the instructions.
- If damaged, the product must no longer be used.

Risk of damage



- Improper handling of the product can lead to damage.
- Do not open the packaging with sharp objects (e.g. knife, scissors or similar), as this may damage the product. Be careful when opening.
- Do not use the product near heat sources or open fire.

3. Product features

3.1. Technical data

PAKU	
Dimensions (W x D x H)	59 x 64 x 84 cm
Seat surface (W x D x H)	42.5 x 46 x 41 cm
Weight	7,5 kg
Resilience	max. 120 kg
Material (frame)	Metal
Material (frame)	100 % polyester

4. Scope of delivery

Check the packaging for external damage upon delivery. Furthermore, immediately after unpacking, check that the scope of delivery is complete and that the product and all components are in perfect condition. Only assemble the product if the scope of delivery is complete and undamaged.

Components/Parts

No.	Description	Number	Images
1	Seat	1	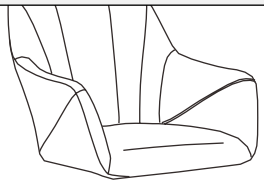
2	Frame	1	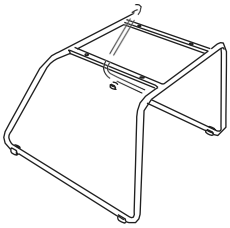
3	Screw	4	
4	Allen key	1	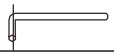

5. Assembly

-Read the following instructions carefully.

5.1. Safety instructions

All health and safety information must be read.

Risk of injury

Improper handling during assembly can lead to injuries

- Please make sure that the package is opened at the top. Be very careful when opening the package as there are fragile parts inside.
- Only place the product on a safe, level and solid surface.
- Use the mounting material supplied.
- Operating errors, assembly errors or damage caused by assembly are excluded from the warranty.
- At least 2 people are required to assemble the product.
- Wear protective clothing such as safety shoes and protective gloves during assembly.

Figure	Set-up step
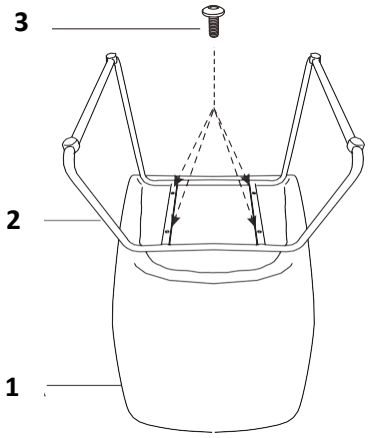	**Step 1** - Line the floor with a blanket to prevent damage to the fabric. - Turn the seat (**1**) upside down. - Turn the frame (**2**) upside down. - Hold the frame on the seat (from below), the hole in the frame and the thread. in the seat surface must be congruent. -Screw the chair together with 4x screw (**3**).
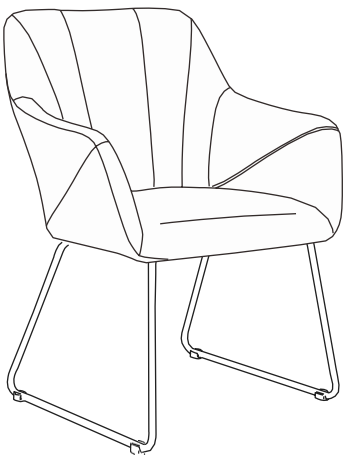	**Step 2** -Finished chair.

6. Application

6.1. Safety instructions

The following health and safety information must be read carefully.

Risk of injury
Improper handling during operation can lead to injuries



- Do not use a damaged product.
- Do not make any changes to the product.
- The product is not a children's toy, climbing wall or sports equipment. Children are not allowed to play with the product.
- Check the fastening at regular intervals.

6.2. Initial commissioning

Check the product for damage before using it for the first time. The product may only be used if it is undamaged.

6.3. Operation

Check before using the product,
-the proper condition.

6.4. Storage location



-Store the product in a well-ventilated and dry place that is as protected from the weather as possible.

7. Troubleshooting

If the following faults occur during operation, please check the following fault causes using the following table. If the fault cannot be remedied by the measures listed, take the product out of operation.

Error	Possible cause	Solution
The product wobbles or vibrates	- The product stands on uneven ground - The fixing screws have come loose - The product is too heavily loaded	- Place the product on a flat surface - Tighten the fastening screws - Respect load limits

If another problem occurs with the product, contact us.

8. Maintenance and care

Clean the surfaces with a damp cloth and a mild detergent. Do not use aggressive cleaning agents or high-pressure cleaners.
Also follow the instructions of the detergent manufacturer.

9. Disposal



- Dispose of the product and all components in accordance with local and country-specific regulations, thus avoiding damage to the environment.
- Our packaging is made from environmentally friendly materials. They can be recycled and thus serve as valuable raw materials. Dispose of the packaging material (cardboard boxes, dirty packaging, etc.) separately and properly in accordance with the applicable national regulations.
- Contact the manufacturer if you are unsure about disposal.
- You can also obtain information on proper disposal from your local waste disposal centre.

Home Deluxe GmbH
Schanzeweg 2
32312 Lübbecke Germany
Tel.: +49 (0)5743 6181-0
www.home-deluxe-gmbh.de

GA-076-00-PAKU
2023/03